ARTEC ELECTRONICS, INC.

32K-100 STATIC RAM CARD

General Information

The 32K-100 ram card has a maximum capacity of 32,768 eight bit bytes of read/write memory and operates in a static mode. All address and data lines are fully buffered.

Address selection is such that any row of eight memory chips may be addressed beginning at any 4K increment from 0 to 61,440. The bank select feature may be used to either use more than the allowable 64K or to split up memory for use with multiple programs.

Battery backup provisions allow an external 2.5 to 5 volt source to maintain the contents of memory when the main computer power is down.

General assembly information

1. Use only 60/40 rosin core solder, 20 gauge or smaller.
2. Use only a 20 to 25 watt iron with a small tip.
3. Use the minumum amount of heat and solder that will fill the plated through holes and wick part way up the component lead.
4. Make sure you have the components in the right places as it is difficult to remove them once soldered.
5. Look carefully at each joint both during and after soldering it. It should have a clean, bright appearance. If the surface is rough or dull it might be a cold solder joint, or the wrong type of solder was used. If so, Reheat the joint carefully, applying little or no additional solder until it appears shiny and smooth.

DO NOT REMOVE THE MEMORY CHIPS FROM THEIR TUBES UNTIL THEY ARE NEEDED AS THEY ARE SUBJECT TO DAMAGE FROM STATIC ELECTRICITY. More about this later.

Detailed assembly information

1. Read all instructions and look at the component layout before continuing.

2. Inventory all parts against the parts list. (Don't remove the memory chips from their tubes.)

3. Examine the PC board for any shorted traces. A few minutes of time will save you many hours of troubleshooting later. Use an ohmeter on the X10 scale to check the parallel traces on the top side of the card. Finding and correcting shorted traces will be much easier before mounting the chip sockets.

4. Install the 18 pin IC sockets in as many rows as your kit contains, starting from the side of the card nearest the gold edge fingers. IMPORTANT IMPORTANT IMPORTANT!!! If you have only 8K of memory chips be sure you install them nearest the edge fingers and support chips as only one regulator is provided and it must power the support chips as well as the two rows of memory. Orient pin 1 on the sockets as shown and solder only two pins on opposing corners to start with. After all the 18 pin sockets are inserted and soldered on <u>only</u> <u>two</u> pins, recheck pin 1 orientation. If necessary, unsolder and reorient any sockets that are oriented incorrectly. Then holding the card and applying pressure to each socket, reheat the two pins previously soldered. You will feel the socket reseat itself closer to the PC board. When you are sure all the sockets are seated firmly against the PC board you may solder the remaining pins.

5. Insert and solder all of the 14 and 16 pin sockets using the proceedure outlined in step 4.

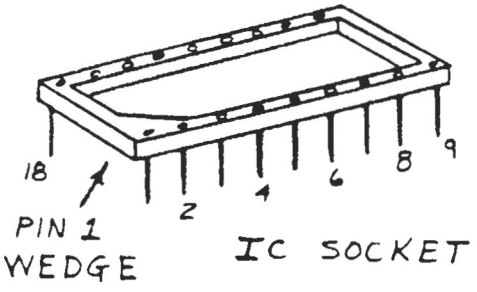

6. (See figure 1.) Install and solder the two resistor paks, RP1, RP2, (or individual resistors if supplied.) Make sure the notch or dot molded into the top of the R Pak is oriented toward pin 1 according to the parts layout diagram. Sometimes Pin 10 must be clipped off for RP2 to fit the PC board.

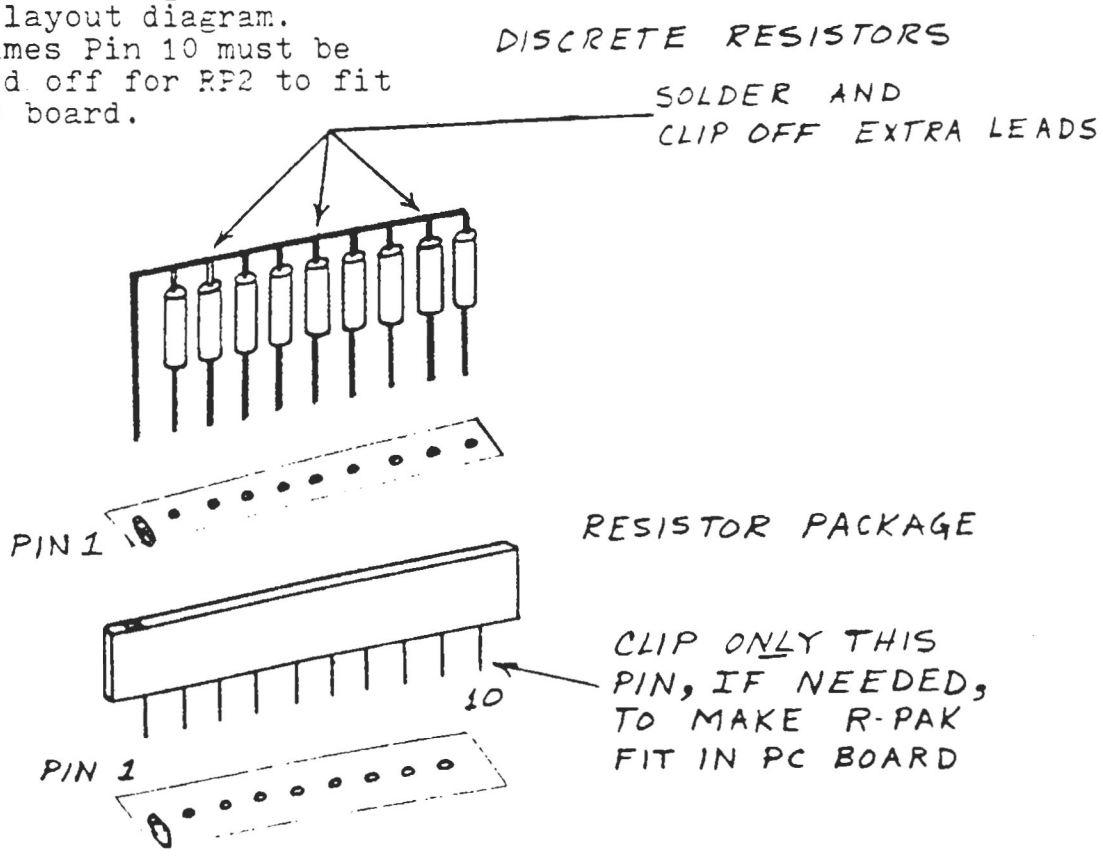

FIGURE 1

DIODE ORIENTATION
FIGURE 2

7. Insert and solder all of the ceramic capacitors as shown on the parts layout diagram. Make sure you only install bypass capacitors in the rows where you actually will have memory chips installed. (Only enough bypass caps for two rows are provided with the original 8K kit.) The capacitors should not be forced down too close to the PC board. There should be about ¼ inch from the tops of the capacitors to the top surface of the PC board when they are soldered in place.

8. Insert and solder the ¼ watt resistor in place. (R1)

9. Insert and solder the diodes (D1 - D4) in place. Be careful to orient the banded end as shown in figure 2 and the component parts layout. As with the bypass caps, install the diode only in the location nearest the edge fingers when only an 8K card is being assembled.

10. Install the 16 Augat pins in the holes provided just above the ICs U1 and U2. See component parts layout. Insert and solder 8 pins at a time. Use the carrier used in shipping to align the pins and hold them for soldering.

11. Bend the leads on the power regulator to match the holes in the PC board as shown on the componant parts layout and in figure 3. Install the regulator in the area provided closest to the edge fingers using the #6-32 X 3/8 screw, nut, lockwasher and heatsink. The use of thermally conductive grease between the regulator and the heatsink is advised. Use Thermalloy #250 or equivalant. After the regulator is firmly held in place by the screw & nut, solder the three leads & clip off the excess.

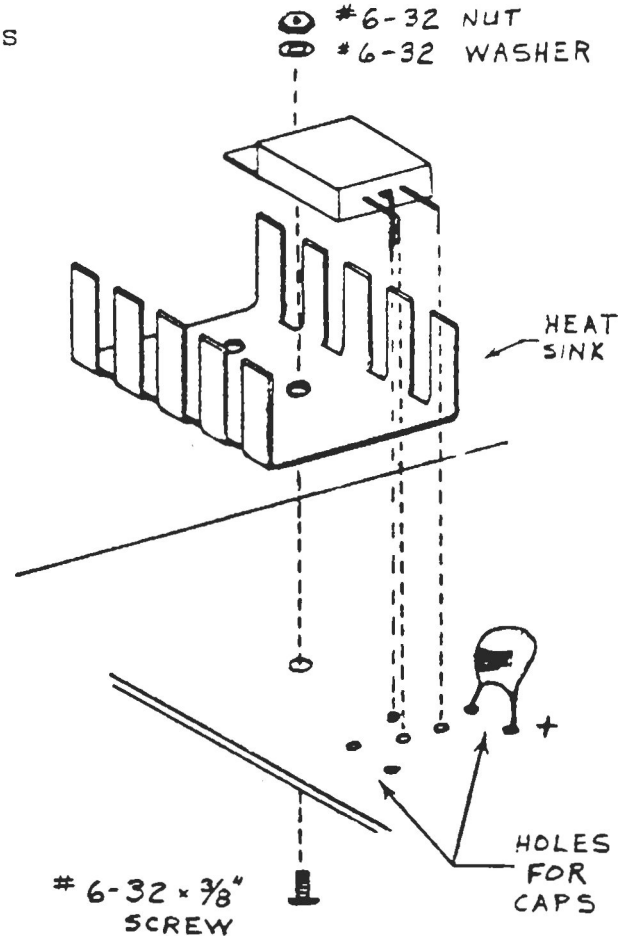

FIGURE 3

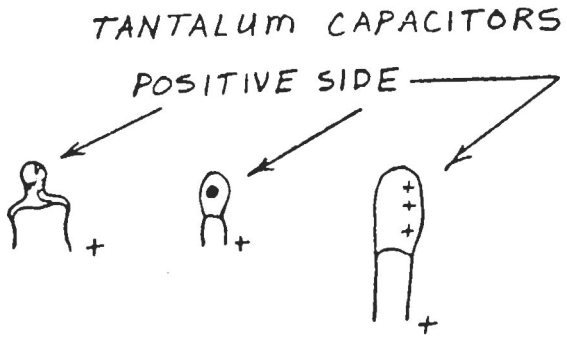

FIGURE 4

12. See figure 5. Install and solder the three pin Molex connector, P1, as shown in the componant parts layout. This connector may be ommited if battery backup is not necessary.

13. Install the two dipped tantalum capacitors provided for each regulator. The polarity of dipped tantalum capacitors may be marked in the following three ways:

    a. A + sign closest to the + lead.
    b. A dot next to the + lead.
    c. A large dot high on the body of the capacitor. (With the dot facing you, the + lead is on the right.)

After being sure about the polarity, solder in the tantalum capacitors for each regulator used.

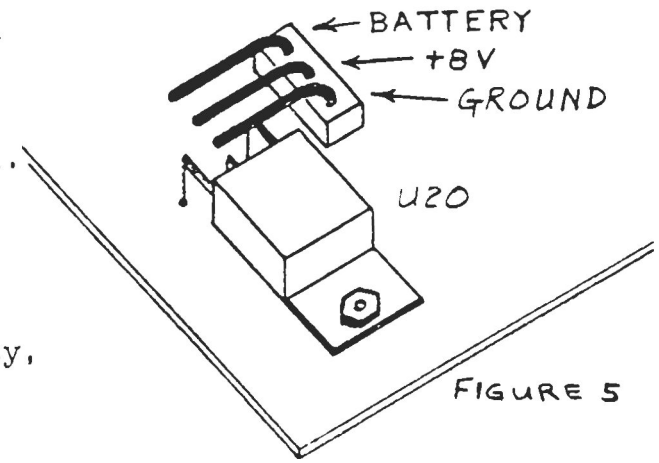

FIGURE 5

14. If an ohmeter is available it may be desirable at this time to check the parallel traces on the top of the board for any shorts to +5, ground or adjacent pins of the memory chips. Hold one lead of the meter on pin 9 of any memory chip location and check for shorts to all of the other pins of each memory chip on the row nearest the edge fingers. Some reading may be present on pin 18 and pin 10, this is normal. Repeat the process using pin 18 as a reference. Also check adjacent traces (i.e. pins 8 and 11 have traces which run parallel throughout the card.) The signal names and corresponding pin numbers which have adjacent traces and thus are most likely to be shorted from careless soldering are as follows:

1	17	2	16	3	15	4	14	5	13	6	12	7	11	8	10	pin #
A_0,	A_6,	A_1,	A_7,	A_2,	A_8,	A_3,	A_9,	A_4,	A_{10},	A_5,	A_{11},	Q,	D,	$\overline{W}$,	$\overline{S}$	signal

15. If a voltmeter is available check the +5 voltage supply as follows: With the power off on your computer install the card either on an extender card or in a location with access to the top of the card. Turn the computer on. Touch the common lead of the meter to the ground buss. (edge connector pins 50/100) When you touch the + lead of your meter to the buss leading to pins 14 or 16 on the support chips or to pin 18 on the memory chips you should read 5 volts. If this voltage is not present you may have one of the tantalum capacitors reversed or a solder bridge on the card. Check to make sure the voltage regulator is installed correctly. If the 5 volts is present you may proceed to step 16.

16. You may now install the support chips (all chips except memory) in their sockets. Refer to the component layout diagram for proper location and orientation of the support chips. BE VERY CAREFUL NOT TO BEND THE LEADS ON THE CHIPS AS THEY ARE INSERTED INTO THEIR SOCKETS. Sometimes the leads must be bent inward a little before insertion.

CAUTION!!!

THE MEMORY CHIPS USED ON THIS CARD ARE OF THE MOS TYPE AND CONSEQUENTLY ARE VERY SUBJECT TO DAMAGE FROM STATIC ELECTRICITY. FOLLOWING THE PROCEEDURES BELOW WILL PREVENT DAMAGE TO THESE DEVICES.

When handling the MOS chips, always first touch the conductive container in which it is stored before touching the chip itself.

If the chip has to be moved from one container to another, touch both containers before doing so.

Do not wear clothing which will build up static charges. Preferably wear clothing made of cotton rather than wool or synthetic fibers.

Always touch the PC board before touching the chip to the board. Try to maintain this contact as much as possible while installing the chips into their sockets.

In general, never touch anything to the chip that you have not touched first while touching both it and the chip itself. Try to keep everything in contact witheverything else as much as possible during the installation.

17. Using the proceedures above you may now install the memory chips. The memory chips are usually more difficult to insert into the sockets than the support chips. This is due to the additional pins and thus the additional force needed to insert them. The best way to overcome the high insertion force is to start inserting the chip from one end and working towards the other end. See fig. 6. Sometimes a slight side to side movement will help free any pins which become caught on the sides of the socket. Be very careful not to bend any pins under the body of the chip. Examine each chip as it is installed for bent pins.

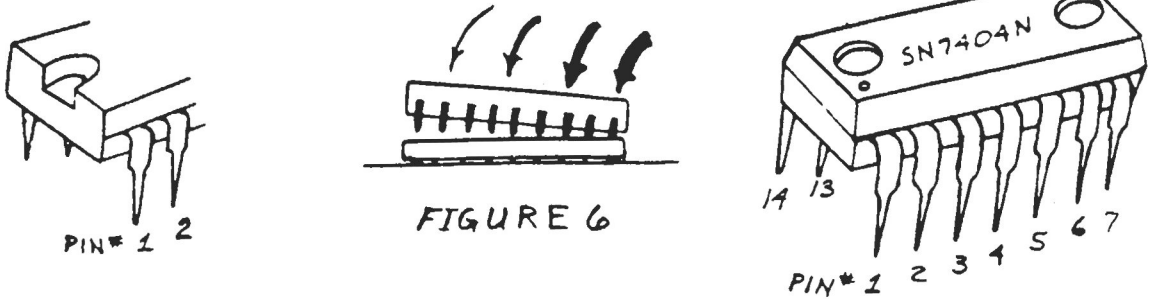

FIGURE 6

18. ADDRESS SELECTION Each horizontal row of memory chips will store 4K bytes of data. Of the total 64K available, there are 16 possible locations for each 4K of memory to occupy. Refer to fig. 7 and fig. 8. In the example in fig. 8 the row of memory chips closest to the edge fingers on the card (which is the row designated as row zero) is jumpered to the Augat pin marked 20K. Row one is jumpered to 24K. Row two to 28K. Row seven is jumpered to 48K. So each horizontal memory row is assigned to occupy a particular 4K out of the 64K possible. Be sure not to duplicate any memory locations which have been previously assigned to another memory card in your system.
Prepare two 2½ inch jumpers for each 8K of memory on your card. Stripping 3/16 insulation from each end of the #24 solid wire provided, insert one end of the wires into the holes provided next to the resistor pak RP-1. If you only have 8K on your card only two jumpers will be needed and they should be installed in holes Ø and 1. Each additional 8K will use two additional jumpers installed in holes 2 and 3, 4and 5, 6and 7 respectively. The other end of these wires will be inserted into the Augat pins to program the address selection as described above.

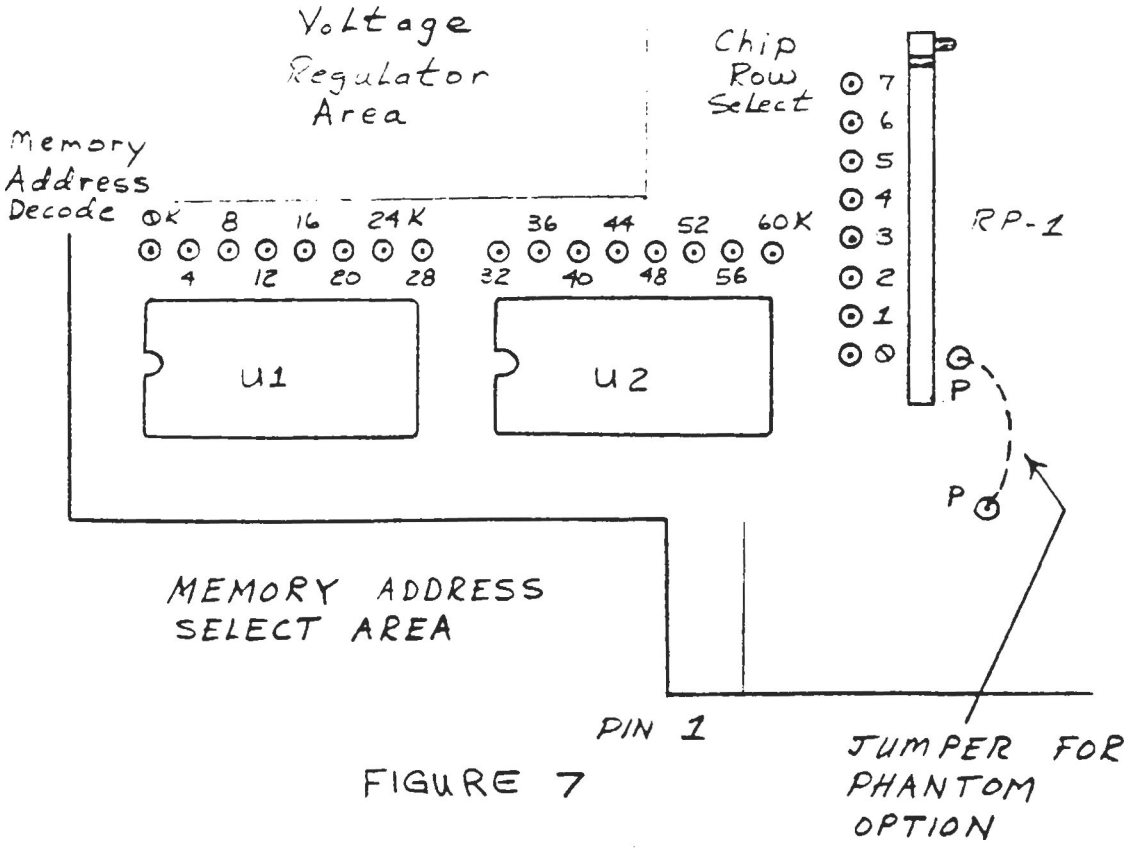

FIGURE 7

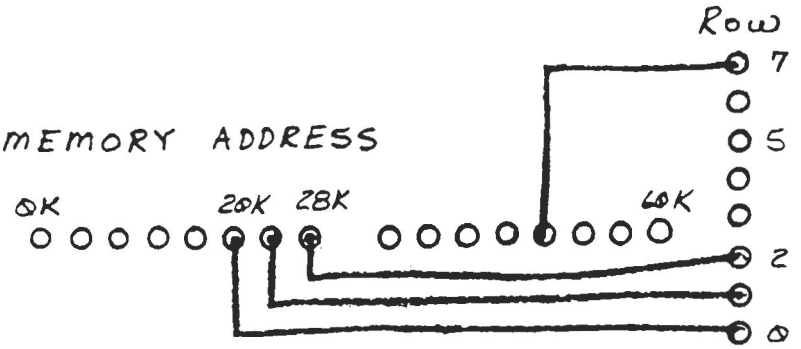

FIGURE 8

19. BANK SELECTION Refer to figs. 9 & 10. Any ARTEC ELECTRONICS 32K-100 memory card may be selected by software to disappear and reappear as memory available to the CPU. There are 8 possible banks of memory that the card may reside in. Any one card may appear in any or all of the 8 banks of memory.
In fig. 10A the card will appear in bank Ø only.
In fig. 10B the card will appear in both banks Ø and 1.
In fig. 10C the card will appear in banks 5, 6, and 7.

IF THE BANK SELECTION FEATURE IS NOT TO BE USED YOU MUST STILL INSTALL A JUMPER TO PROGRAM THE CARD FOR BANK Ø.

Outputting a bank number on I/O port 64 (100Q, 40H) enables a bank to be accessed by the CPU. Outputting a zero disables all banks. Outputting DØ thru D7 high enables bank Ø thru 7 respectively. Any number of banks may be enabled at a time. For example, in 8080 assembly language code:

```
MVI A,1
OUT 64      This enables bank Ø

MVI A,8
OUT 64      This enables bank 4

MVI A,9
OUT 64      This enables banks Ø and 4
```

Upon applying power to the card bank Ø will automatically be selected.

20. PHANTOM SELECTION See fig. 7. A jumper should be installed from points P to P if this card is to be used in a system which uses a PROM or ROM monitor which must coexist with RAM in the same memory location. With the jumper installed the 32K-100 will be disabled by the signal $\overline{\text{PHANTOM}}$, which is buss line 67.

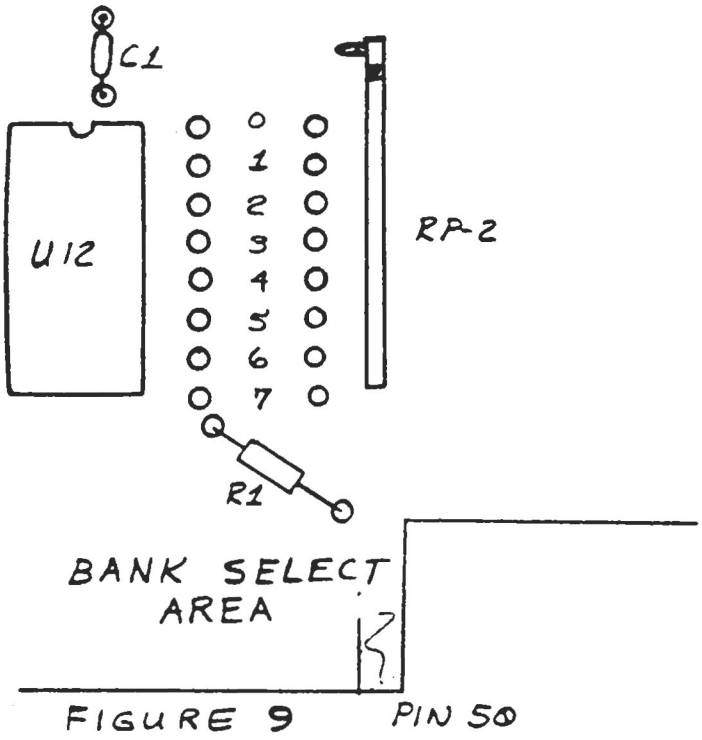

FIGURE 9

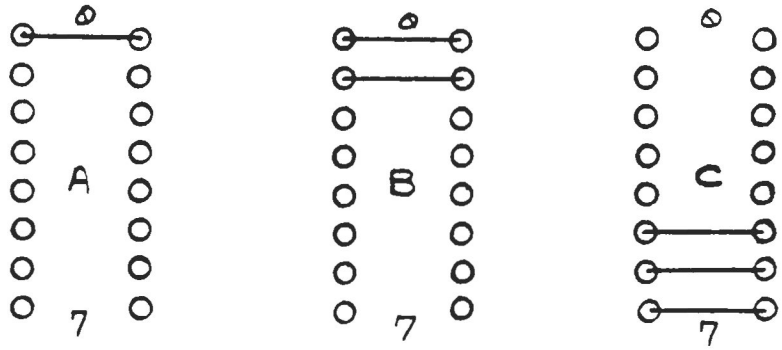

FIGURE 10

21. Install the card in your computer. Check the +8 volts on pins 1 and 50. If your computer is S-100 compatable this voltage should fall in the range of 7.5 V to 9V. If your computer does not fall within this range you MUST do one or more of the following:

Reduce your computer's supply voltage to fall within the range stated above. (change voltage taps if available, or install power diodes in series with the +8 volt supply)

Provide airflow across your 32K-100 memory card. (A surprisingly small amount of airflow will carry away the excessive heat generated by high input voltage.)

Bypass the regulators with 10 ohm 5 watt resistors.

Failure to perform one or more of the above recommendations will cause the regulators on your 32K-100 card to overheat and shut down.

NOTE: An increase from 8 volts to 11 volts on the incoming power doubles the power that must be dissipated by the regulators on every card in your system. All of the cards in your system will have their lives extended by reducing the excessively high voltage on the +8 volt supply.

32K-100 THEORY OF OPERATION

1. SYSTEM ORGANIZATION

The 32K-100 Static RAM Memory Card is organized as 8 blocks of 4K each. Board select, memory enable, power supplies and buss buffering are common to all 8 blocks. Essentially this card is comprised of eight 4K memory boards.

Each horizontal row of eight memory chips comprises one 4K block of memory. Each chip is organized as 4K X 1 bits. Column zero stores all bits DØ.

The eight blocks of memory are labeled Row Ø thru Row 7; Row Ø being closest to the edge fingers on the card.

2. MEMORY READ

During any CPU instruction which acceses memory, the CPU first puts out a memory address on address busses AØ thru A15. The CPU then drives buss line SMEMR highto indicate a memory read operation is occurring. Shortly after that PDBIN goes high to signify that data should be placed on the DATA IN busses for the CPU to read.

Hex inverters U4 and U5 buffer and invert address lines AØ thru A11 to drive the address inputs of all the memory chips U21 to U84. This isolates any capacitive loading of the memory chips from the mother board buss lines which improves system reliability.

U9 and U10 buffer the data out lines from the mother board buss and drive the D inputs of the RAM chips. SMEMR is buffered by U8.

In order to read or write into any memory location on this board, three signals must occur simultaneously to select the board. Pin 3 of U6 must be high to indicate that a memory access is taking place (a memory read or memory write). PHANTOM on U6 pin 4 must also be high. U6 pin 5 high indicates that this particular card is part of a bank which is currently enabled. The U6 pin 6 board select output will go low enabling U1 and U2.

U1 and U2 comprise a 1 of 16 decoder which decodes A12 thru A15. These 16 decoded outputs correspond to the 16 possible 4K segments of memory.

Assuming the user has strapped the $\overline{Ø}$ output of U1 to Row Ø and addresses A12 to A15 are logical zeroes, the chip select (pin 10) of Row Ø (U21 thru U28) of the RAMS will go low.

This discussion will assume that the user has strapped the $\overline{\text{ØK}}$ output of U1 to $\overline{\text{ROW Ø}}$ and addresses A12 to A15 are logical zeroes. The chip select for row Ø of the RAMs (U21 - U28) will go low to enable that row. This places a low on one input of U3. U3's pin 8 output will go high to indicate that a row of RAMs on this card is being accessed. When PDBIN goes high it will drive U6 pin 1 high. Since U6 pin 13 and 2 are already high pin 12 will go low. This enables the DATA IN buss buffers, U14 and U15 placing the data from the RAMs on the DATA IN buss lines to be read by the CPU.

3. WRITING INTO MEMORY

The memory write circuitry functions in much the same manner as memory read. In this mode, however, the DATA IN buffers U14 and U15 are not enabled.

The chip select circuitry functions identically as for memory read with one exception. When the CPU executes an instruction to write into memory SMEMR will not go high, but MWRITE will. MWRITE is buffered and inverted by U7 and applied to the $\overline{\text{WRITE}}$ input (pin 8) of all RAM chips U21 - U84. Only those RAMs which have $\overline{\text{WRITE}}$ low and chip select low will be written into. Thus the data presented by the CPU to the DATA OUT buss lines will be written into the memory at the address selected on the address buss.

4. BANK SELECTING

The bank select feature allows the user to expand the memory of his system beyond the 64K directly addressable by the CPU. The hardware on this card allows the user to access up to ½ megabyte of memory. There are 8 possible banks of memory; this card may reside in as few as 1 or as many as all 8 banks. Bank selection is accomplished by outputing a byte to port 64 decimal. Which bank (banks) is selected is determined by which bit position (positions) is a logical one.

U16 and U7 decode a 64 decimal (40 hex) from the address buss. U16 pin 8 is logically anded with $\overline{\text{PWR}}$ and SOUT in two sections of U8. When the CPU executes an output instruction to port 64 decimal the data from the CPU on the DATA OUT lines will be latched in U11 and U12. The outputs from U11 and U12 are active low. If the user has installed a jumper in the position for bank 1, then U11 pin 14 will go low after the CPU has executed an output instruction to this port with bit D1 a logical 1. This will in turn place a logical Ø on U13 pin 12 which is used as an 8 input OR gate. U13's pin 8 output will then go high, indicating that the bank which this card is a part of has been enabled.

When the system is first turned on $\overline{\text{POC}}$ goes low momentarily

and clears the 8 bit latch comprised of U11, U12. This forces all of their outputs high (false) except for U11 pin 2 which will be low. This insures bank Ø will be initially selected.

It is possible for the user to change the bank select port address from 64 decimal to 128 decimal, if he should so desire. This is accomplished by simply cutting two traces on the PC board. The trace between points A and C and the trace between D and F should be cut. The user must also add two jumpers; one from D to E and one from B to C.

5. BATTERY BACKUP

J1 is provided as a point at which battery power may be applied to the memory. Diodes D1 - D4 prevent backflow of current from the regulator into the battery. They also provide reverse polarity protection in the event the MOLEX connector is plugged in incorrectly.

Pin 1 should go to the minus side of the battery. Pin 3 should go to the plus side of the battery. (2.5 to 5 volts) Pin 2 is connected on the memory board directly to the +8 V buss on the mother board. This pin may be used with external components to provide a source of DC voltage to charge the external battery pack.

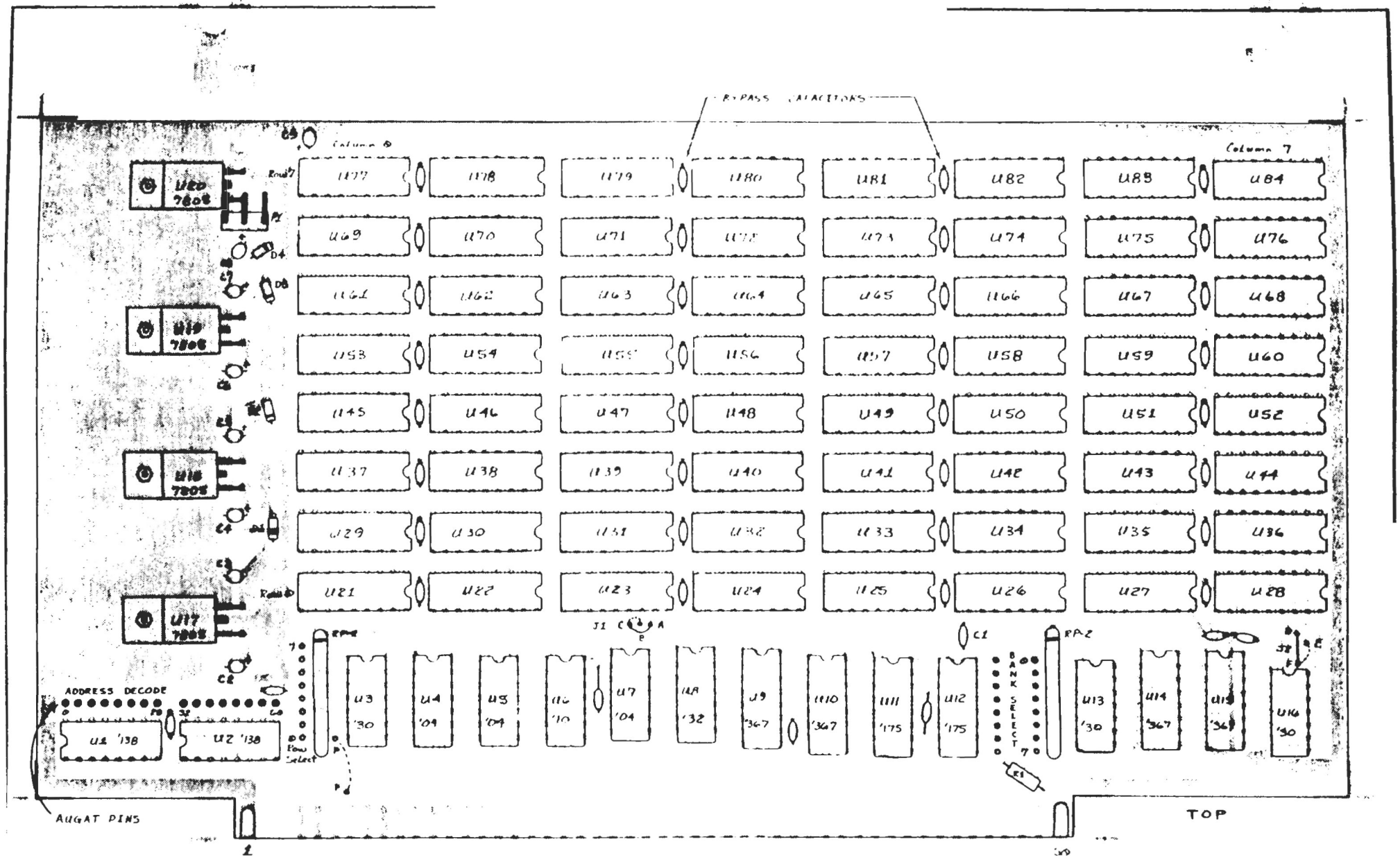

REVISIONS			ARTEC ELECTRONICS
NO	DATE	BY	
			32K-100 COMPONENT LAYOUT
DRAWN BY		SCALE	MATERIAL
CHK'D		DATE	DRAWING NO
TRACED		APP'D	106.03 00

32K-100

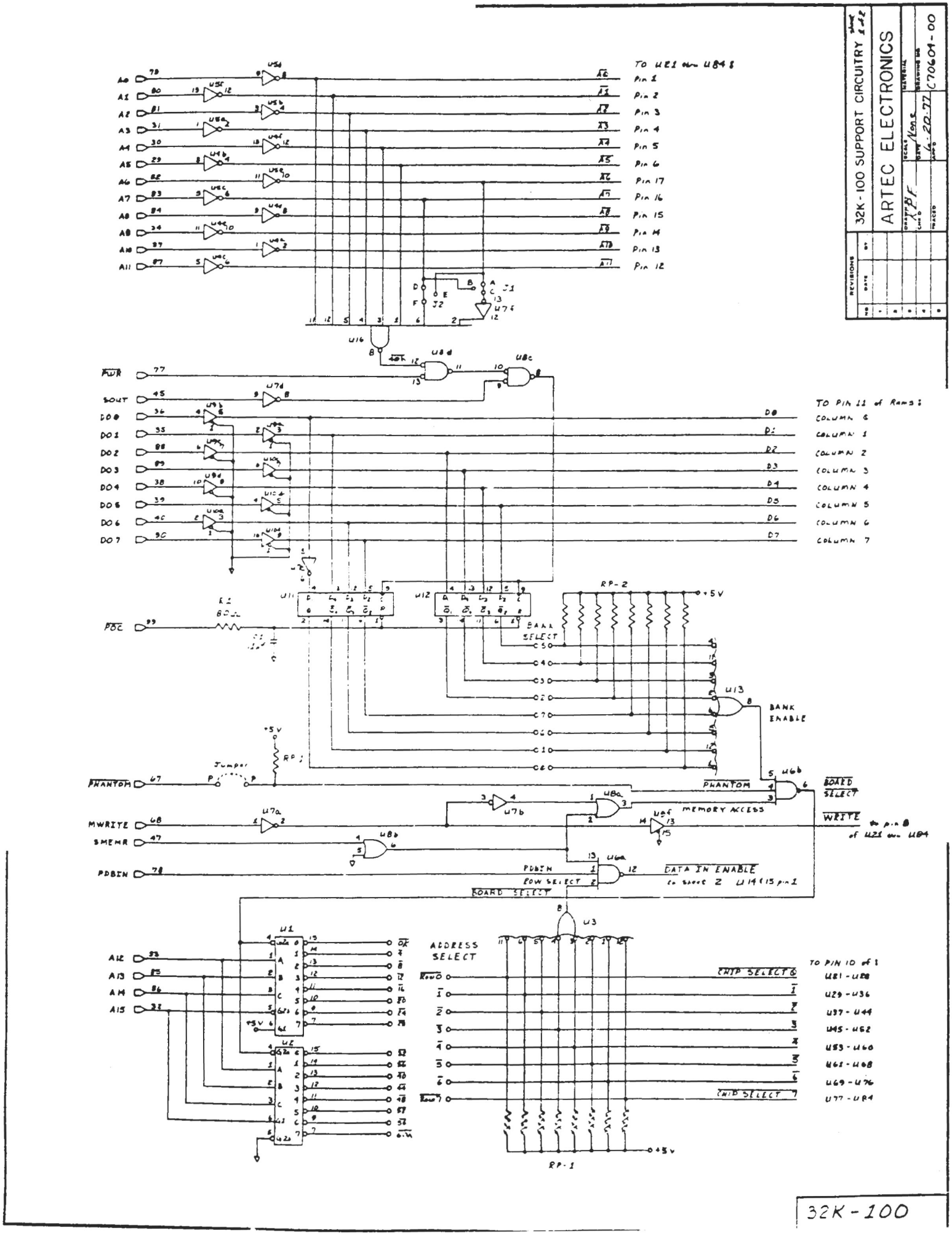
32K-100 SUPPORT CIRCUITRY
ARTEC ELECTRONICS
C70604-00
TO U21 thru U84:
Pin 1
Pin 2
Pin 3
Pin 4
Pin 5
Pin 6
Pin 17
Pin 16
Pin 15
Pin 14
Pin 13
Pin 12
TO PIN 11 of Rams:
COLUMN 0
COLUMN 1
COLUMN 2
COLUMN 3
COLUMN 4
COLUMN 5
COLUMN 6
COLUMN 7
BANK SELECT
BANK ENABLE
PHANTOM
BOARD SELECT
MEMORY ACCESS
WRITE
to pin 8 of U21 thru U84
DATA IN ENABLE
to sheet 2 U14 & 15 pin 1
ROW SELECT
ADDRESS SELECT
CHIP SELECT
TO PIN 10 of:
U21 - U28
U29 - U36
U37 - U44
U45 - U52
U53 - U60
U61 - U68
U69 - U76
U77 - U84
RP-1
RP-2
+5V
Jumper
PWR
SOUT
POC
MWRITE
SMEMR
PDBIN
A12
A13
A14
A15
32K-100

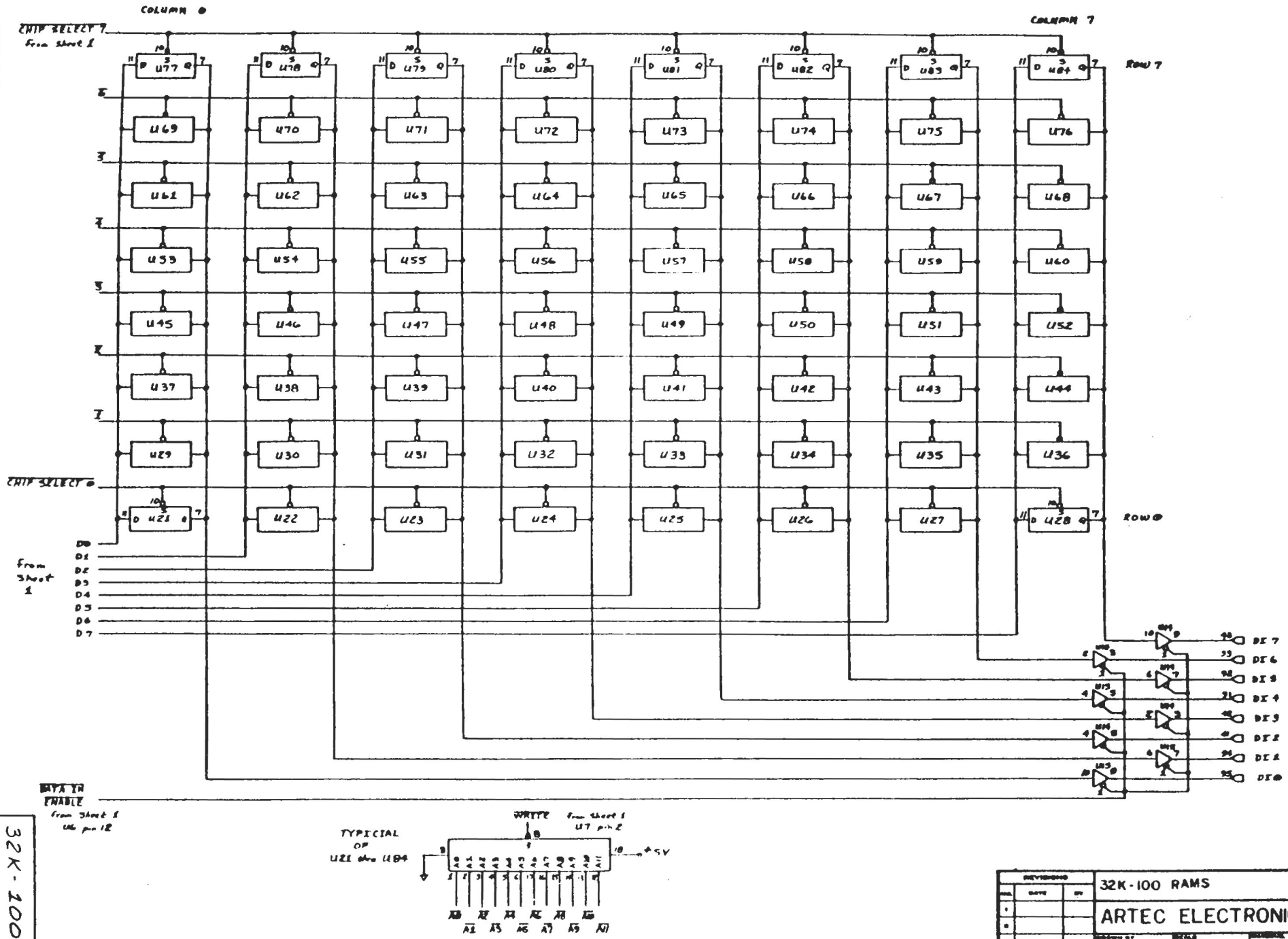
COLUMN 0
COLUMN 7
CHIP SELECT 7
From Sheet 1
ROW 7
ROW 6
CHIP SELECT 6
From Sheet 1
DATA IN ENABLE
From Sheet 1
TYPICAL OF U21 thru U84
WRITE
From Sheet 1
U7 pin 2
+5V
32K-100 RAMS
ARTEC ELECTRONICS
None
6-20-77
C 10405-00
32K-100

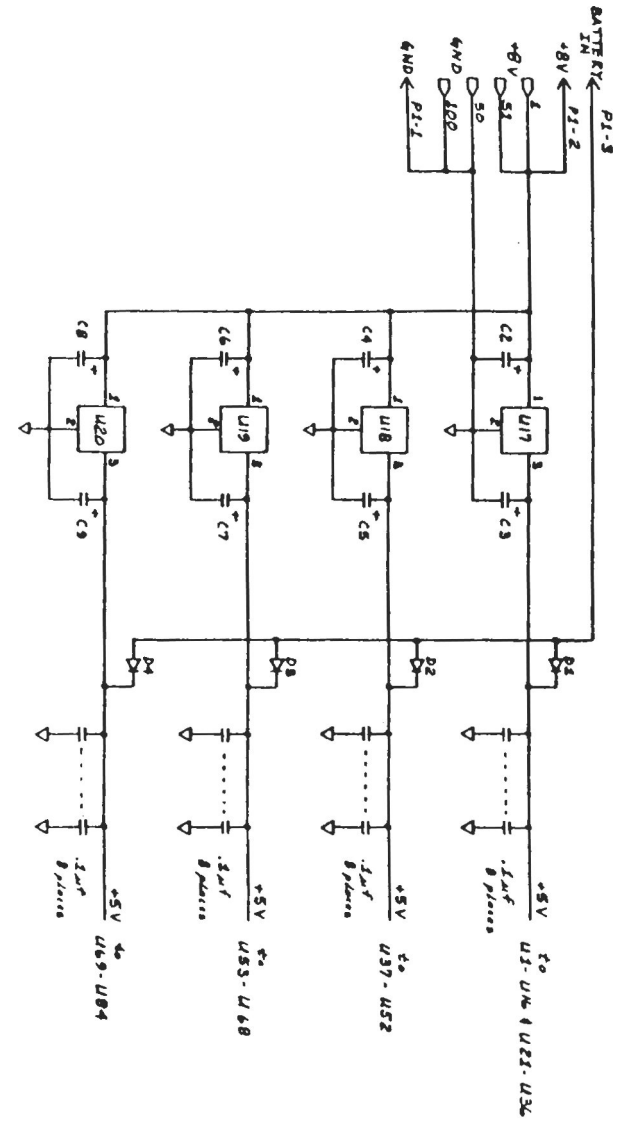

REVISIONS			ARTEC ELECTRONICS		
NO	DATE	BY	32K-100 POWER SUPPLY		
			DRAWN BY KPF	SCALE	MATERIAL
			CHK'D	DATE 6-20-77	DRAWING NO C70606-00
			TRACED	APP'D	

32K-100

PARTS LIST 32K-100 Basic board w/8K

	DESIG.	QTY	TYPE#	MFG.	DESCRIPTION
*	C1, unmrk	16	CY20C104P	CENT	.1uf monolithic capacitor
*	C2, C3	2			10uf @ 15V tantalum cap.
	D1	1	1N4001	T.I.	Diode
*	R1	1			180 ohm ¼ watt resistor
*	RP1, RP2	2			1K 10 pin R Pak
	U1, U2	2	SN74LS138N	T.I.	I.C.
	U3, U13,U16	3	SN74LS30N	T.I.	"
*	U4,U5,U7	3	SN74LS04N	T.I.	"
	U6	1	SN74LS10N	T.I.	"
	U8	1	SN74LS32N	T.I.	"
	U9, U10	2	SN74LS367N	T.I.	"
			orSN74367N	T.I.	"
	U11, U12	2	SN74LS175N	T.I.	"
	U14, U15	2	SN74367N	T.I.	"
*	U17	1	UA7805CKC	T.I.	" Regulator
	U21 to U36	16	TMS 4044NL	T.I.	" Memory

MISC. HARDWARE

8	C83-14-02	T.I.	14 pin socket
8	C83-16-02	T.I.	16 pin socket
16	C83-18-02	T.I.	18 pin socket
P1 1	09-66-1031	MOLEX	3 pin plug
J1 1	09-50-7031	"	3 pin connector
3	08-50-0108	"	crimp pins
1	1179	H.H.SMITH	6-32 Nut
1	1128	"	6-32 X 3/8 screw
1	1426	"	#6 lockwasher
1	716-AG2D	AUGAT	connector pins
6 inch	8538	Belden	#24 wire
1	32K-100	ARTEC	P.C. Board
1	372-A	AHAM	Heatsink

* Note: These parts may be substituted for other values depending upon availability.

PARTS LIST 32K-100 8K add-on memory

	DESIG.	QTY.	TYPE#	MFG.	DESCRIPTION
*	C4, C5	2			10uf @ 15V tantalum
	D2	1	1N4001	T.I.	Diode
*	U18	1	UA7805CKC	T.I.	I.C. Regulator
	U37 to U44	16	TMS4044NL	T.I.	I.C. memory
			or "		
*		8	CY20C104P	CENT.	.1uf capacitor
		16	C83-18-02	T.I.	18 pin sockets
		1	372-A	AHAM	Heatsink
		1	1179	H.H.SMITH	6-32 Nut
		1	1426	"	#6 lockwasher
		1	1128	"	6-32 X 3/8 screw
		6 inch	8538	Belden	#24 hookup wire

* Note: These parts may be substituted for other values depending upon availability.