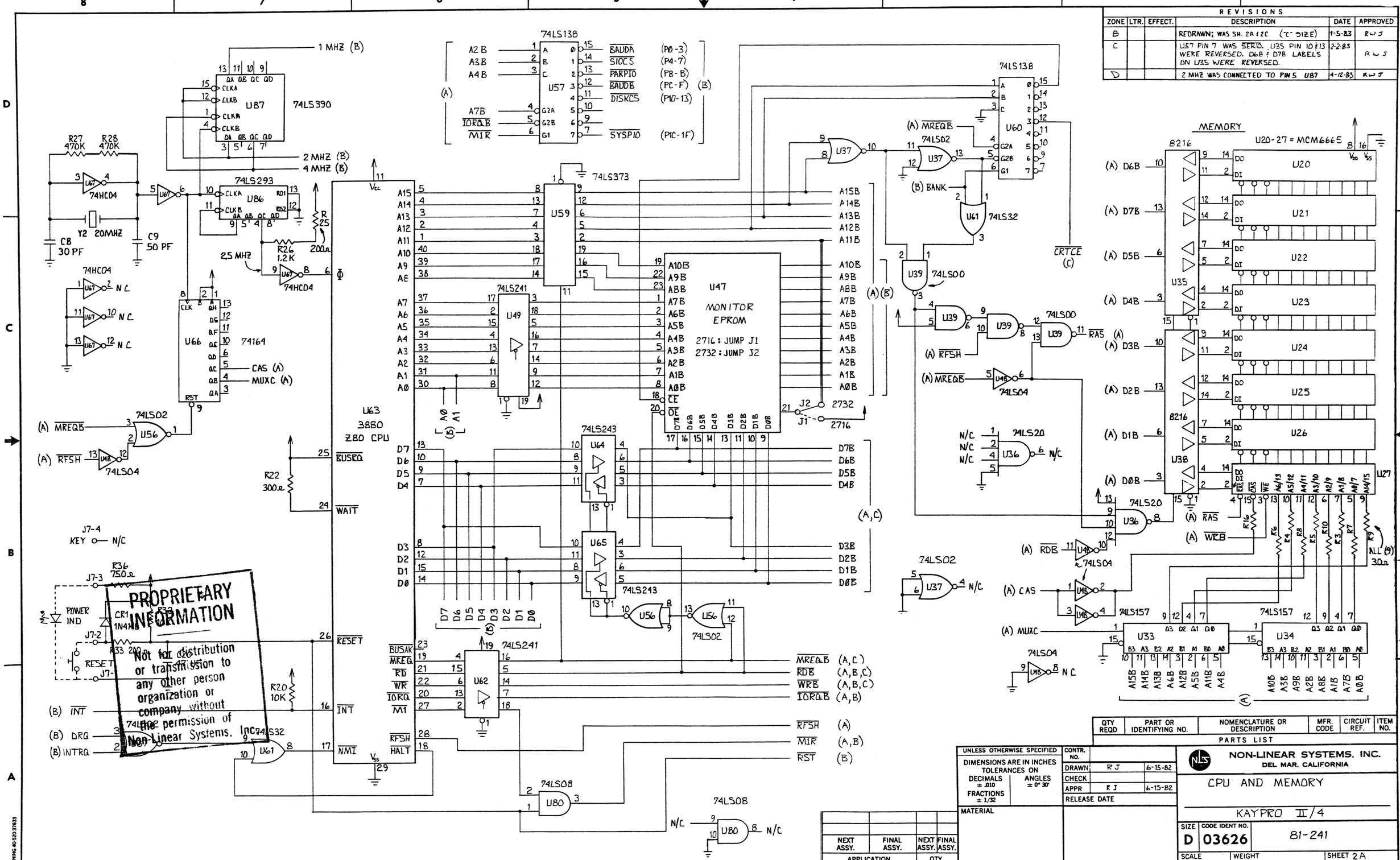

REVISIONS					
ZONE	LTR.	EFFECT.	DESCRIPTION	DATE	APPROVED
B			REDRAWN; WAS SH. 2A & 2C ("C" SIZE)	1-5-83	R J
C			U57 PIN 7 WAS SERD. U35 PIN 10 & 13 WERE REVERSED. D6B & D7B LABELS ON U35 WERE REVERSED.	2-2-83	R J
D			2 MHZ WAS CONNECTED TO PIN 5 U87	4-12-83	R J

QTY REQD	PART OR IDENTIFYING NO.	NOMENCLATURE OR DESCRIPTION	MFR. CODE	CIRCUIT REF.	ITEM NO.

PARTS LIST

UNLESS OTHERWISE SPECIFIED
DIMENSIONS ARE IN INCHES
TOLERANCES ON
DECIMALS ± .010
ANGLES ± 0° 30'
FRACTIONS ± 1/32

MATERIAL

CONTR. NO.		
DRAWN	R J	6-15-82
CHECK		
APPR	R J	6-15-82
RELEASE DATE		

NEXT ASSY.	FINAL ASSY.	NEXT ASSY.	FINAL ASSY.
APPLICATION		QTY.	

NON-LINEAR SYSTEMS, INC.
DEL MAR, CALIFORNIA

CPU AND MEMORY

KAYPRO II/4

SIZE	CODE IDENT NO.	
D	03626	81-241
SCALE	WEIGHT	SHEET 2A

BRUNING 40-520 37633